# LXCB22-LKFS

## Lumen and Kelvin Field Selectable Center Basket

| | |
|---|---|
| Project: | |
| Type: | |
| Catalog #: | |

***STANDARD***

CERTIFIED · DLC LISTED · FCC · DAMP · IC RATED FOR INSULATED CEILINGS · 2.5kV Surge Protection

## FEATURES

- *Field selectable 3500k (warm/neutral white), 4000k (neutral white) & 5000k (cool white) color temperatures.**
- *Long-life LEDs provide at least 196,000 hours of operation with at least 70% of initial lumen output ($L_{70}$).***
- *Provides a range of 3,000 to 4,300 nominal lumens.**
- *Uniform illumination with no visible LED pixilation.*
- *Universal 120-277 AC voltage (50-60Hz) is standard.*
- *0-10vdc, continuous dimming capability is standard.*
- *Power factor > 0.90.*
- *Total harmonic distortion < 20%.*
- *Color rendering index ($R_a$) > 80.*
- *Steel housing and PMMA lens.*
- *Easy installation in new construction or retrofit. Fits in standard 2' x 2' grid ceilings.*
- *Built-in earthquake clips provide secure installation in grid ceilings.*
- *Standard mounting options include recessed mounting in grid ceilings, or suspended mounting using earthquake clips. For other mounting options, see Mounting Means (page 4).*

* *Contact factory for other color temperatures and lumen packages.*
** *L70 hours are IES TM-21-11 calculated hours.*

## WARRANTY & LISTINGS

- *cULus listed for damp locations and insulated ceilings in ambient temperatures from -25°C to 50°C (-13°F to 122°F).*
- *UL listed for maximum of 4, 12 AWG through branch circuit conductor.*
- *Inherently protected.*
- *Type IC rated for insulated ceilings.*
- *DLC approved.*
- *Low risk of flicker (per IEEE1789-2015) at 100% light output level.*
- *Complies with FCC Part 15, class A.*
- *Complies with IEEE C.62.41-2002, input transient surge protection (2.5kV).*
- *5-year warranty of all electronics and housing.*

## DIMENSIONS

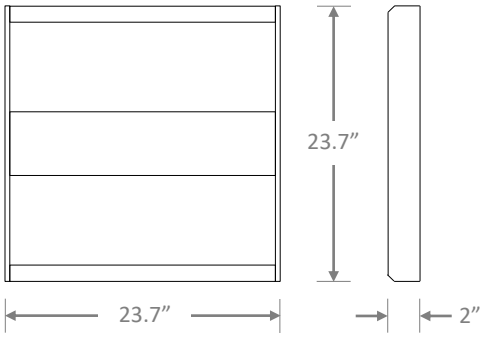


***Weight: 7 lbs.***

## ORDERING INFORMATION

**Example:** LXCB22-4L-LKFS-EM13

| Series | Nominal Lumen Output | | Select | Externally Installed Emergency Drivers [1] | | Accessories | |
|---|---|---|---|---|---|---|---|
| LXCB22 | 4L | 4,000 nominal lumens | LKFS | EM5 | 755 lumens | DWS-010-T | 0-10v dimmer, toggle switch |
| | | | | EM10 | 1,617 lumens | DWS-010-D | 0-10v dimmer, decora switch |
| | | | | EM13 | 1,940 lumens | | |
| | | | | Blank | No emergency driver | IP710-DLZ | 0-10v dimmer, button switch |

[1] See emergency driver compatibility list (page 2).


**LumexLED • 1489 W 13th Street • Riviera Beach FL 33404 • (561) 863-3499 • Sales@LumexLED.com**



*Specifications and dimensions subject to change without notice*

# LXCB22-LKFS Lumen and Kelvin Field Selectable Center Basket

## COMPATIBLE EMERGENCY DRIVERS*

| Emergency Driver Part Number | EM5 | | EM10 | | EM13 | |
|---|---|---|---|---|---|---|
| Model | Watts | EM Lumens | Watts | EM Lumens | Watts | EM Lumens |
| LXCB22-4L-LKFS | 5.0 | 755 | 10.7 | 1617 | 13.7 | 1940 |

* Suitable for ambient temperatures above 10°C (50°F).

## ACCESSORIES (Order Separately)

**Remote Mount Emergency Drivers***

LXBLEM-CP-5C = Emergency driver - EM5
LXBLEM-CP-10C = Emergency driver - EM10
LXBLEM-CP-13C = Emergency driver - EM13

* Suitable for ambient temperatures above 10°C (50°F).

## COMPATIBLE DIMMERS & CONTROLS

| Manufacturer | Model Number | Dimming Range | Load Switching Capacity |
|---|---|---|---|
| LumexLED | LXDWS-010V-T | 10%-100% | 600W |
| LumexLED | LXDWS-010V-D | 10%-100% | 600W |
| Leviton | IP710-LFZ | 10%-100% | 1200W |
| Lutron | DVSTV | 10%-100% | 450W |

# LXCB22-LKFS

## Lumen and Kelvin Field Selectable Center Basket

Lumex LED

## ELECTRICAL DATA

| Series | Measurements | Low Lumens | | | Mid Lumens | | | High Lumens | | |
|---|---|---|---|---|---|---|---|---|---|---|
| | | 3500K | 4000K | 5000K | 3500K | 4000K | 5000K | 3500K | 4000K | 5000K |
| LXCB22-4L-LKFS | Lumens | 3073 | 3176 | 3120 | 3640 | 3772 | 3649 | 4220 | 4370 | 4196 |
| | Watts | 22 | 22 | 22 | 27 | 27 | 27 | 32 | 31 | 32 |
| | Efficacy | 137 | 144 | 139 | 134 | 142 | 134 | 131 | 140 | 131 |
| | Input Current (A) | 120V = 0.18A | 120V = 0.18A | 120V = 0.18A | 120V = 0.23A | 120V = 0.23A | 120V = 0.23A | 120V = 0.27A | 120V = 0.26A | 120V = 0.27A |
| | | 240V = 0.09A | 240V = 0.09A | 240V = 0.09A | 240V = 0.11A | 240V = 0.11A | 240V = 0.11A | 240V = 0.13A | 240V = 0.13A | 240V = 0.13A |
| | | 277V = 0.08A | 277V = 0.08A | 277V = 0.08A | 277V = 0.10A | 277V = 0.10A | 277V = 0.10A | 277V = 0.12A | 277V = 0.11A | 277V = 0.12A |

## PHOTOMETRIC DATA

### LXCB22-4L-LKFS

**Luminaire Data**

| | |
|---|---|
| Description | Center Basket 2X2 4L 5K - LKFS |
| Total Lumens | 4,205 |
| Input Wattage | 32 |
| Efficacy (lm/W) | 131 |
| Spacing Criterion (0-180°) | 1.24 |
| Spacing Criterion (90-270°) | 1.28 |

**Zonal Lumen Summary**

| Zone | Lumens | %Fixt |
|---|---|---|
| 0-20° | 521 | 12.4% |
| 0-30° | 1,104 | 26.3% |
| 0-40° | 1,807 | 43.0% |
| 20-50° | 2,017 | 48.0% |
| 40-70° | 1,936 | 46.0% |
| 0-60° | 3,206 | 76.2% |
| 0-80° | 4,102 | 97.5% |
| 0-90° | 4,202 | 99.9% |
| 90-180° | 3 | 0.1% |
| 0-180° | 4,205 | 100.0% |

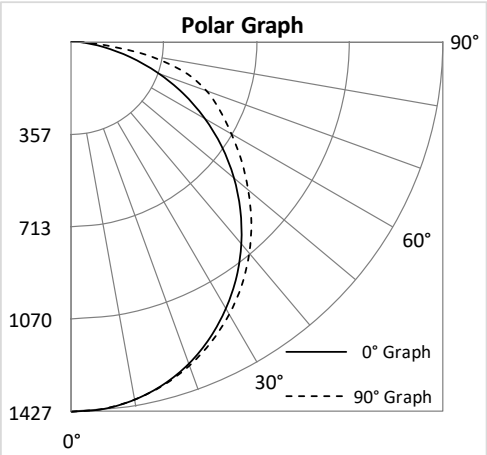

# LXCB22-LKFS Lumen and Kelvin Field Selectable Center Basket

## MOUNTING MEANS – ORDER SEPARATELY

- *Optional surface mounting kits (LXSMKT-22) mounts below the ceiling.*
- *Optional flange mounting kits provide for recessed installation on plaster or other hard ceilings. Attach Flange Mount Kit (LXFLANGEKIT22-ET) to ceiling joists or other stationary structures, and the panel is mounted flush to the ceiling.*
- *Optional cable mounting kits provide additional security, as well as suspended mounting. Attach one end of the Cable Mount Kit (LXPNL-CM) to luminaire earthquake clips using spring clips, and attach the other end to stationary structures using the adjustable, locking ceiling attachment (see picture below right).*

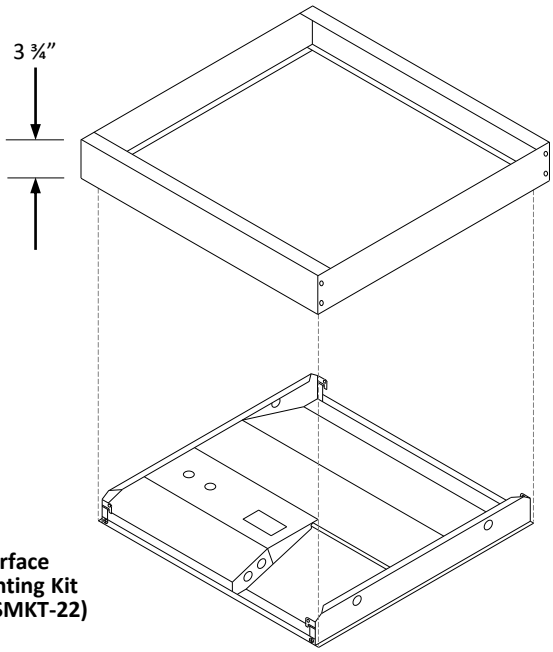


**Surface Mounting Kit (LXSMKT-22)**

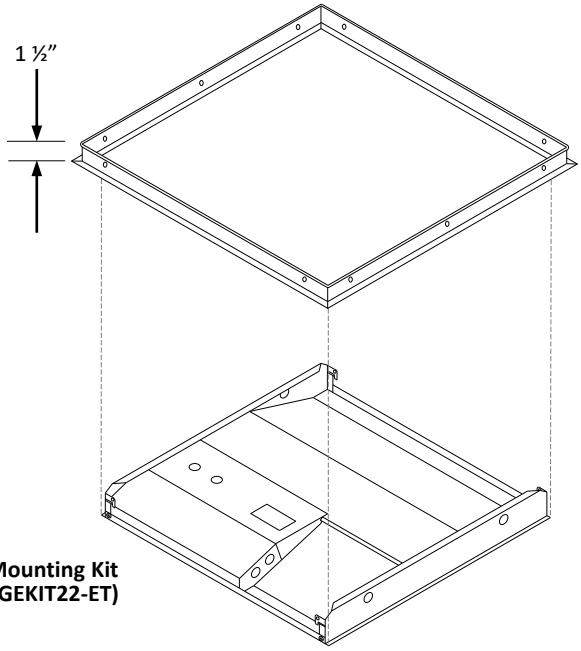


**Flange Mounting Kit (LXFLANGEKIT22-ET)**

**Cable Mounting Kit (LXPNL-CM)**

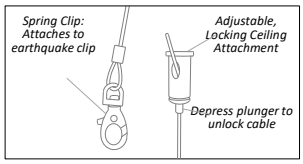


*Cable Mount Kit:*
- *Spring Clip*
- *Adjustable, locking ceiling attachment*