LXHBLSR

Sensor Ready Linear High Bay
Lumen & Kelvin Selectable

Project:	
Type:	
Catalog #:	

STANDARD

FEATURES

- *Field selectable 4000k (neutral white) and 5000k (cool white) color temperatures.**
- *Long-life LEDs provide 134,000 hours of operation with at least 70% of initial lumen output (L_{70}), and 40,000 hours with at least 90% of initial lumen output (L_{90}).***
- *LED color maintenance < 0.003 chromaticity shift (Δu'v') over the initial 6,000 hours of operation.*
- *Tri-lumen selectable delivers 12,000 to 60,000 nominal lumens (see lumen table on page 3).****
- *Screw in sensor ready. Sensor and remote control sold separately. Remote control required to change factory sensor settings.*
- *Emergency driver option available.*
- *Medium distribution is standard with optional narrow or wide distribution lenses.*
- *Universal 120-277V AC voltage (50-60Hz) is standard. 347-480V achieved with step-down transformers is optional.*
- *0-10vdc dimming drivers are standard.*
- *Power factor > 0.90.*
- *Total harmonic distortion < 20%.*
- *Color rendering index > 80.*
- *Painted steel housing (stamped) and polycarbonate lenses are standard.*
- *Wire guards available.*

* *Default kelvin temperature = 4000k.*
** *L_{70} & L_{90} hours are IES TM-21-11 calculated hours.*
***Default power setting = highest lumen output.*

WARRANTY & LISTINGS

- *cULus listed for damp locations in ambient temperatures from -40°C to 50°C (-40°F to 122°F). LXHBLSR-181512L-4K5K = 55°C (131°F).*
- *DLC 5.1 premium listed for medium distribution.***
- *Input transient surge protection = 6kV.*
- *Complies with FCC Part 15, class A.*
- *5-year warranty on all electronics and housing.*

***DLC 5.1 standard listed for narrow and wide distributions.*

MOUNTING OPTIONS

- *Chain-mount kit (includes v-hooks and 1-meter-long chain) are standard.*
- *Optional pendant mounting kit provides pendant attachment to ½" rigid conduit.*
- *Optional surface mounting kit provides attachment to solid surfaces.*
- *Optional cable mount kit provides luminaire suspension.*

DIMENSIONS

Model	Size (inches) & Weight (lbs)			
	L	W	H	Weight
LXHBLSR-181512L-4K5K	16.5	10.25	1.8	4.6
LXHBLSR-241815L-4K5K	23	10.25	1.8	7
LXHBLSR-363024L-4K5K	31	10.25	1.8	9.5
LXHBLSR-604836L-4K5K	44	10.25	1.8	12

ORDERING INFORMATION

Example: LXHBLSR-181512L-4K5K-ND-EM25

Series	Nominal Lumen Output (Selectable)		Kelvin Selectable	Input Voltage[1]		Lens Distribution		Emergency Driver	
LXHBLSR	181512L	18,000/15,000/12,000	4K5K	UNC	347-480V	ND	Narrow	EM25	25W emergency driver (factory installed)
	241815L	24,000/18,000/15,000		Blank	120-277V	WD	Wide	Blank	No emergency driver
	363024L	36,000/30,000/24,000				Blank	Medium		
	604836L	60,000/48,000/36,000							

[1] *UNC option not compatible with EM25 emergency driver.*

LumexLED • 1489 W 13th Street • Riviera Beach FL 33404 • (561) 863-3499 • Sales@LumexLED.com

Specifications and dimensions subject to change without notice

ACCESSORIES (order separately)

Sensor

HD07VR-PH-1	=	Passive infrared sensor - maximum mounting height = 39 FT, factory settings: detection area = 100%, hold time = 5 sec, stand-by period = 0 sec, stand-by dimming level = 10%, daylight threshold = disabled
HD07VR-MH-B-1	=	Microwave step-dimming sensor - maximum mounting height = 49 FT, factory settings: detection area = 100%, hold time = 5 sec, stand-by period = 0 sec, stand-by dimming level = 10%, daylight threshold = disabled
HD05R	=	Remote control for HD07VR-PH-1 & HD07VR-MH-B-1 (required to change factory settings)

Lens

HBLSR-LENS-181512L-ND	=	Narrow distribution lens for HBLSR-181512L-4K5K
HBLSR-LENS-241815L-ND	=	Narrow distribution lens for HBLSR-241815L-4K5K
HBLSR-LENS-363024L-ND	=	Narrow distribution lens for HBLSR-363024L-4K5K
HBLSR-LENS-604836L-ND	=	Narrow distribution lens for HBLSR-604836L-4K5K
HBLSR-LENS-181512L-MD	=	Medium distribution lens for HBLSR-181512L-4K5K (ships with luminaire standard)
HBLSR-LENS-241815L-MD	=	Medium distribution lens for HBLSR-241815L-4K5K (ships with luminaire standard)
HBLSR-LENS-363024L-MD	=	Medium distribution lens for HBLSR-363024L-4K5K (ships with luminaire standard)
HBLSR-LENS-604836L-MD	=	Medium distribution lens for HBLSR-604836L-4K5K (ships with luminaire standard)
HBLSR-LENS-181512L-WD	=	Wide distribution lens for HBLSR-181512L-4K5K
HBLSR-LENS-241815L-WD	=	Wide distribution lens for HBLSR-241815L-4K5K
HBLSR-LENS-363024L-WD	=	Wide distribution lens for HBLSR-363024L-4K5K
HBLSR-LENS-604836L-WD	=	Wide distribution lens for HBLSR-604836L-4K5K

Wire Guard

HBLSR-WG-181512L	=	Wire guard kit for HBLSR-181512L-4K5K
HBLSR-WG-241815L	=	Wire guard kit for HBLSR-241815L-4K5K
HBLSR-WG-363024L	=	Wire guard kit for HBLSR-363024L-4K5K
HBLSR-WG-604836L	=	Wire guard kit for HBLSR-604836L-4K5K

Mounting Options

HBLSR-SMK	=	Surface mount kit for HBLSR - all models (not compatible with UNC or EM25 options)
HBLSR-PMK	=	Pendant mount for HBLSR - all models (not compatible with UNC or EM25 options)
LEDFHB-CMK3	=	Cable mount kit, 3 meters long - all models
LEDFHB-CMK5	=	Cable mount kit, 5 meters long - all models

COMPATIBLE EMERGENCY DRIVERS INTERNALLY INSTALLED*

Emergency Driver Part Number	EM25	
Model	Watts	EM Lumens
HBLSR-181512L-4K5K	25	3750
HBLSR-241815L-4K5K	25	3750
HBLSR-363024L-4K5K	25	3750
HBLSR-604836L-4K5K	25	3750

* Suitable for ambient temperatures above 0°C (32°F).

COMPATIBLE DIMMERS & CONTROLS

Manufacturer	Model Number	Dimming Range	Load Switching Capacity
LumexLED	LXDWS-010V-T	10%-100%	600W
LumexLED	LXDWS-010V-D	10%-100%	600W
Leviton	IP710-LFZ	10%-100%	1200W
Lutron	DVSTV	10%-100%	450W

LumexLED • 1489 W 13th Street • Riviera Beach FL 33404 • (561) 863-3499 • Sales@LumexLED.com

Specifications and dimensions subject to change without notice

ELECTRICAL DATA

Series	Measurements	Low Lumens		Mid Lumens		High Lumens	
		4000K	5000K	4000K	5000K	4000K	5000K
LXHBLSR-181512L-4K5K	Lumens	12,007	12,307	14,555	15,071	18,085	18,421
	Watts	76	77	96	98	120	123
	Efficacy	158	159	152	154	150	150
	Input Current (A)	120V = 0.63A	120V = 0.64A	120V = 0.80A	120V = 0.82A	120V = 1.00A	120V = 1.03A
		240V = 0.32A	240V = 0.32A	240V = 0.40A	240V = 0.41A	240V = 0.50A	240V = 0.51A
		277V = 0.27A	277V = 0.28A	277V = 0.35A	277V = 0.35A	277V = 0.43A	277V = 0.44A

Series	Measurements	Low Lumens		Mid Lumens		High Lumens	
		4000K	5000K	4000K	5000K	4000K	5000K
LXHBLSR-241815L-4K5K	Lumens	15,021	15,557	18,017	18,477	24,047	24,241
	Watts	94	96	115	117	158	158
	Efficacy	159	162	157	158	152	153
	Input Current (A)	120V = 0.78A	120V = 0.80A	120V = 0.96A	120V = 0.98A	120V = 1.32A	120V = 1.32A
		240V = 0.39A	240V = 0.40A	240V = 0.48A	240V = 049A	240V = 0.66A	240V = 0.66A
		277V = 0.34A	277V = 0.35A	277V = 0.42A	277V = 0.42A	277V = 0.57A	277V = 0.57A

Series	Measurements	Low Lumens		Mid Lumens		High Lumens	
		4000K	5000K	4000K	5000K	4000K	5000K
LXHBLSR-363024L-4K5K	Lumens	24,049	24,854	30,037	30,299	35,517	36,076
	Watts	152	155	193	197	237	242
	Efficacy	158	160	156	154	150	149
	Input Current (A)	120V = 1.27A	120V = 1.29A	120V = 1.61A	120V = 1.64A	120V = 1.98A	120V = 2.02A
		240V = 0.63A	240V = 0.65A	240V = 0.80A	240V = 0.82A	240V = 0.99A	240V = 1.01A
		277V = 0.55A	277V = 0.56A	277V = 0.70A	277V = 0.71A	277V = 0.86A	277V = 0.87A

LumexLED • 1489 W 13th Street • Riviera Beach FL 33404 • (561) 863-3499 • Sales@LumexLED.com

Specifications and dimensions subject to change without notice

ELECTRICAL DATA

Series	Measurements	Low Lumens		Mid Lumens		High Lumens	
		4000K	5000K	4000K	5000K	4000K	5000K
LXHBLSR-604836L-4K5K	Lumens	37,049	38,465	48,182	49,009	60,104	61,319
	Watts	236	241	312	317	404	412
	Efficacy	157	160	154	155	149	149
	Input Current (A)	120V = 1.97A	120V = 2.01A	120V = 2.60A	120V = 2.64A	120V = 3.37A	120V = 3.43A
		240V = 0.98A	240V = 1.00A	240V = 1.30A	240V = 1.32A	240V = 1.68A	240V = 1.72A
		277V = 0.85A	277V = 0.87A	277V = 1.13A	277V = 1.14A	277V = 1.46A	277V = 1.49A

PHOTOMETRIC DATA

LXHBLSR-181512L-4K5K

Luminaire Data

Description	Linear High Bay Lumen/Kelvin Selectable
Total Lumens	18,423
Input Wattage	123
Efficacy (lm/W)	150
Spacing Criterion (0-180°)	1.22
Spacing Criterion (90-270°)	1.18

Photometrics calculated at 5000k - high lumens setting

Zonal Lumen Summary

Zone	Lumens	%Fixt
0-20°	3,402	18.5%
0-30°	7,155	38.8%
0-40°	11,161	60.6%
20-50°	10,840	58.8%
40-70°	6,281	34.1%
0-60°	16,247	88.2%
0-80°	18,156	98.6%
0-90°	18,423	100.0%
90-180°	0	0.0%
0-180°	18,423	100.0%

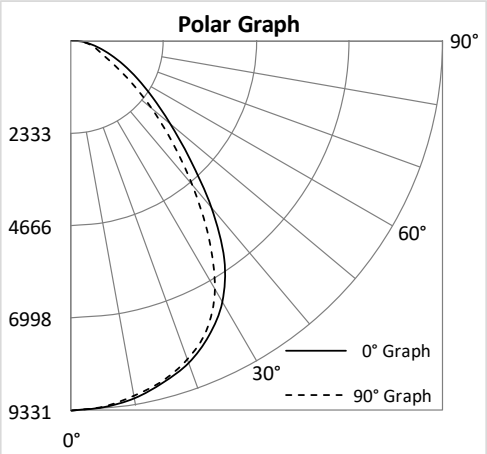

LXHBLSR-241815L-4K5K

Luminaire Data

Description	Linear High Bay Lumen/Kelvin Selectable
Total Lumens	24,269
Input Wattage	158
Efficacy (lm/W)	153
Spacing Criterion (0-180°)	1.24
Spacing Criterion (90-270°)	1.18

Photometrics calculated at 5000k - high lumens setting

Zonal Lumen Summary

Zone	Lumens	%Fixt
0-20°	4,468	18.4%
0-30°	9,398	38.7%
0-40°	14,661	60.4%
20-50°	14,249	58.7%
40-70°	8,283	34.1%
0-60°	21,353	88.0%
0-80°	23,902	98.5%
0-90°	24,269	100.0%
90-180°	0	0.0%
0-180°	24,269	100.0%

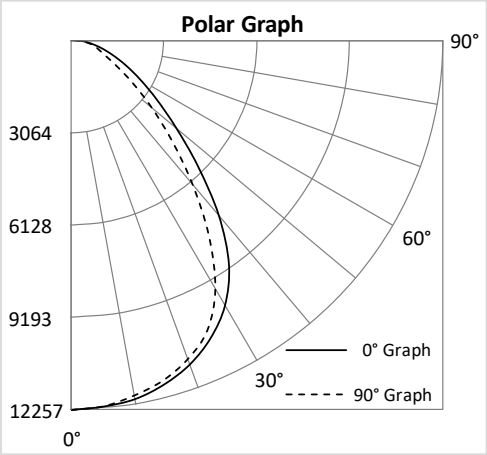

LumexLED • 1489 W 13th Street • Riviera Beach FL 33404 • (561) 863-3499 • Sales@LumexLED.com

Specifications and dimensions subject to change without notice

PHOTOMETRIC DATA

LXHBLSR-363024L-4K5K

Luminaire Data

Description	Linear High Bay Lumen/Kelvin Selectable
Total Lumens	36,087
Input Wattage	242
Efficacy (lm/W)	149
Spacing Criterion (0-180°)	1.24
Spacing Criterion (90-270°)	1.18

Photometrics calculated at 5000k - high lumens setting

Zonal Lumen Summary

Zone	Lumens	%Fixt
0-20°	6,560	18.2%
0-30°	13,802	38.2%
0-40°	21,585	59.8%
20-50°	21,143	58.6%
40-70°	12,526	34.7%
0-60°	31,718	87.9%
0-80°	35,540	98.5%
0-90°	36,087	100.0%
90-180°	0	0.0%
0-180°	36,087	100.0%

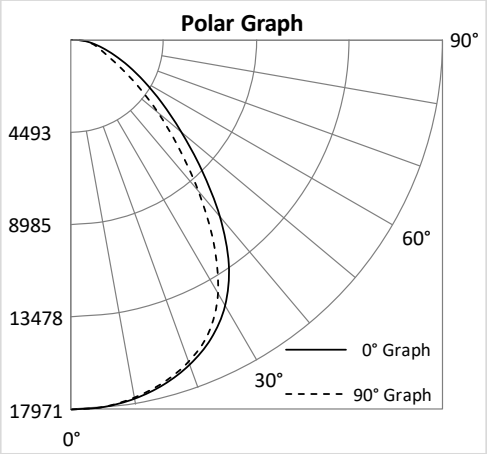

LXHBLSR-604836L-4K5K

Luminaire Data

Description	Linear High Bay Lumen/Kelvin Selectable
Total Lumens	61,323
Input Wattage	412
Efficacy (lm/W)	149
Spacing Criterion (0-180°)	1.24
Spacing Criterion (90-270°)	1.18

Photometrics calculated at 5000k - high lumens setting

Zonal Lumen Summary

Zone	Lumens	%Fixt
0-20°	11,100	18.1%
0-30°	23,335	38.1%
0-40°	36,491	59.5%
20-50°	35,901	58.5%
40-70°	21,535	35.1%
0-60°	53,908	87.9%
0-80°	60,446	98.6%
0-90°	61,323	100.0%
90-180°	0	0.0%
0-180°	61,323	100.0%

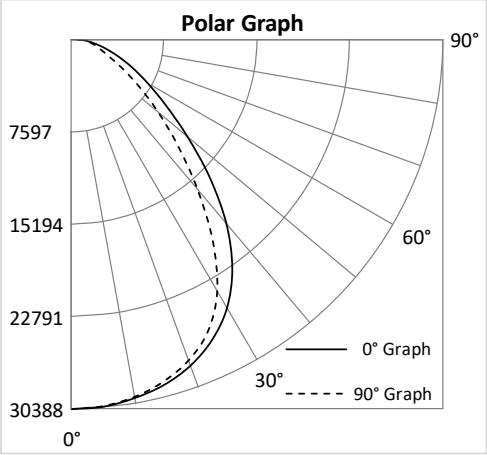

LumexLED • 1489 W 13th Street • Riviera Beach FL 33404 • (561) 863-3499 • Sales@LumexLED.com

Specifications and dimensions subject to change without notice

CORDS & PLUGS

- *When ordering a cord/cord & plug, use the following suffix choices.*
- *Example: HBLSR-181512L-4K5K-EM25-**10C4***
  Note: cord & plugs do not affect the ability to install sensors.

Part number suffix	Description	For use with
6C3	6' cord - 3 conductor (black/white/green)	Standard & UNC
6C4	6' cord - 4 conductor (black/white/green/red)	EM driver
6C5	6' cord - 5 conductor (black/white/green/purple/pink)	Dimming (standard & UNC)
6C6	6' cord - 6 conductor (black/white/green/red/purple/pink)	Dimming & EM driver
10C3	10' cord - 3 conductor (black/white/green)	Standard & UNC
10C4	10' cord - 4 conductor (black/white/green/red)	EM driver
10C5	10' cord - 5 conductor (black/white/green/purple/pink)	Dimming (standard & UNC)
10C6	10' cord - 6 conductor (black/white/green/red/purple/pink)	Dimming & EM driver
15C3	15' cord - 3 conductor (black/white/green)	Standard & UNC
15C4	15' cord - 4 conductor (black/white/green/red)	EM driver
15C5	15' cord - 5 conductor (black/white/green/purple/pink)	Dimming (standard & UNC)
15C6	15' cord - 6 conductor (black/white/green/red/purple/pink)	Dimming & EM driver
6W3	6' whip - 3 conductor (black/white/green)	Standard & UNC
6W4	6' whip - 4 conductor (black/white/green/red)	EM driver
6W5	6' whip - 5 conductor (black/white/green/purple/pink)	Dimming (standard & UNC)
6W6	6' whip - 6 conductor (black/white/green/red/purple/pink)	Dimming & EM driver
6P515	6' cord - 3 conductor (black/white/green) - NEMA 5-15 plug (120V/15A)	Standard luminaire
6P615	6' cord - 3 conductor (black/white/green) - NEMA 6-15 plug (240V/15A)	Standard luminaire
6P715	6' cord - 3 conductor (black/white/green) - NEMA 7-15 plug (277V/15A)	Standard luminaire
6P520	6' cord - 3 conductor (black/white/green) - NEMA 5-20 plug (120V/20A)	Standard luminaire
6P620	6' cord - 3 conductor (black/white/green) - NEMA 6-20 plug (277V/20A)	Standard luminaire
6P515L	6' cord - 3 conductor (black/white/green) - NEMA L5-15 plug (120V/15A locking)	Standard luminaire
6P615L	6' cord - 3 conductor (black/white/green) - NEMA L6-15 plug (240V/15A locking)	Standard luminaire
6P715L	6' cord - 3 conductor (black/white/green) - NEMA L7-15 plug (277V/15A locking)	Standard luminaire
6P520L	6' cord - 3 conductor (black/white/green) - NEMA L5-20 plug (120V/20A locking)	Standard luminaire
6P620L	6' cord - 3 conductor (black/white/green) - NEMA L6-20 plug (240V/20A locking)	Standard luminaire
6P720L	6' cord - 3 conductor (black/white/green) - NEMA L7-20 plug (277V/20A locking)	Standard luminaire
6P2420L	6' cord - 3 conductor (black/white/green) - NEMA L24-20 plug (347V/20A locking)	UNC luminaire
6P820L	6' cord - 3 conductor (black/white/green) - NEMA L8-20 plug (480V/20A locking)	UNC luminaire
10P515	10' cord - 3 conductor (black/white/green) - NEMA 5-15 plug (120V/15A)	Standard luminaire
10P615	10' cord - 3 conductor (black/white/green) - NEMA 6-15 plug (240V/15A)	Standard luminaire
10P715	10' cord - 3 conductor (black/white/green) - NEMA 7-15 plug (277V/15A)	Standard luminaire
10P520	10' cord - 3 conductor (black/white/green) - NEMA 5-20 plug (120V/20A)	Standard luminaire
10P620	10' cord - 3 conductor (black/white/green) - NEMA 6-20 plug (277V/20A)	Standard luminaire
10P515L	10' cord - 3 conductor (black/white/green) - NEMA L5-15 plug (120V/15A locking)	Standard luminaire
10P615L	10' cord - 3 conductor (black/white/green) - NEMA L6-15 plug (240V/15A locking)	Standard luminaire
10P715L	10' cord - 3 conductor (black/white/green) - NEMA L7-15 plug (277V/15A locking)	Standard luminaire
10P520L	10' cord - 3 conductor (black/white/green) - NEMA L5-20 plug (120V/20A locking)	Standard luminaire
10P620L	10' cord - 3 conductor (black/white/green) - NEMA L6-20 plug (240V/20A locking)	Standard luminaire
10P720L	10' cord - 3 conductor (black/white/green) - NEMA L7-20 plug (277V/20A locking)	Standard luminaire
10P2420L	10' cord - 3 conductor (black/white/green) - NEMA L24-20 plug (347V/20A locking)	UNC luminaire
10P820L	10' cord - 3 conductor (black/white/green) - NEMA L8-20 plug (480V/20A locking)	UNC luminaire
15P515	15' cord - 3 conductor (black/white/green) - NEMA 5-15 plug (120V/15A)	Standard luminaire
15P615	15' cord - 3 conductor (black/white/green) - NEMA 6-15 plug (240V/15A)	Standard luminaire
15P715	15' cord - 3 conductor (black/white/green) - NEMA 7-15 plug (277V/15A)	Standard luminaire
15P520	15' cord - 3 conductor (black/white/green) - NEMA 5-20 plug (120V/20A)	Standard luminaire
15P620	15' cord - 3 conductor (black/white/green) - NEMA 6-20 plug (277V/20A)	Standard luminaire
15P515L	15' cord - 3 conductor (black/white/green) - NEMA L5-15 plug (120V/15A locking)	Standard luminaire
15P615L	15' cord - 3 conductor (black/white/green) - NEMA L6-15 plug (240V/15A locking)	Standard luminaire
15P715L	15' cord - 3 conductor (black/white/green) - NEMA L7-15 plug (277V/15A locking)	Standard luminaire
15P520L	15' cord - 3 conductor (black/white/green) - NEMA L5-20 plug (120V/20A locking)	Standard luminaire
15P620L	15' cord - 3 conductor (black/white/green) - NEMA L6-20 plug (240V/20A locking)	Standard luminaire
15P720L	15' cord - 3 conductor (black/white/green) - NEMA L7-20 plug (277V/20A locking)	Standard luminaire
15P2420L	15' cord - 3 conductor (black/white/green) - NEMA L24-20 plug (347V/20A locking)	UNC luminaire
15P820L	15' cord - 3 conductor (black/white/green) - NEMA L8-20 plug (480V/20A locking)	UNC luminaire

LumexLED • 1489 W 13th Street • Riviera Beach FL 33404 • (561) 863-3499 • Sales@LumexLED.com

Specifications and dimensions subject to change without notice

DIMENSIONAL DRAWINGS

LXHBLSR-181512L-4K5K

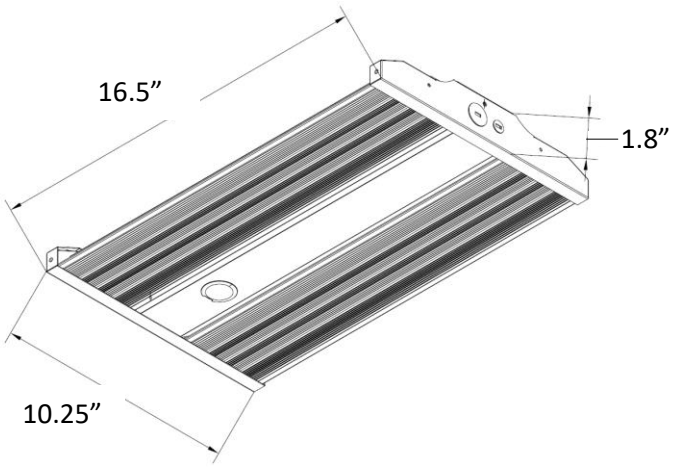

LXHBLSR-241815L-4K5K

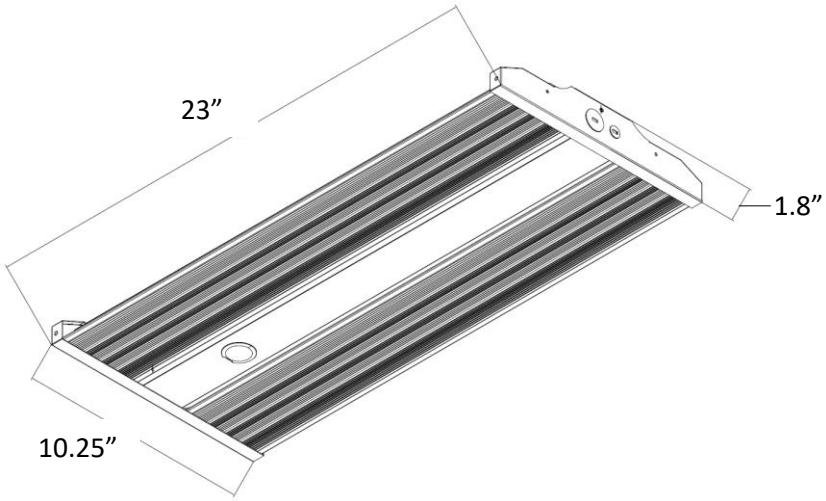

LXHBLSR-363024L-4K5K

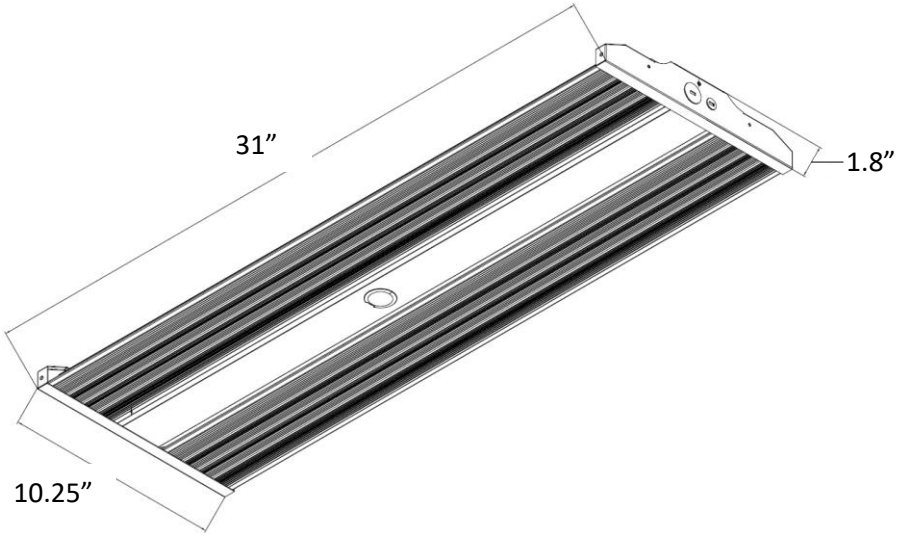

LXHBLSR-604836L-4K5K

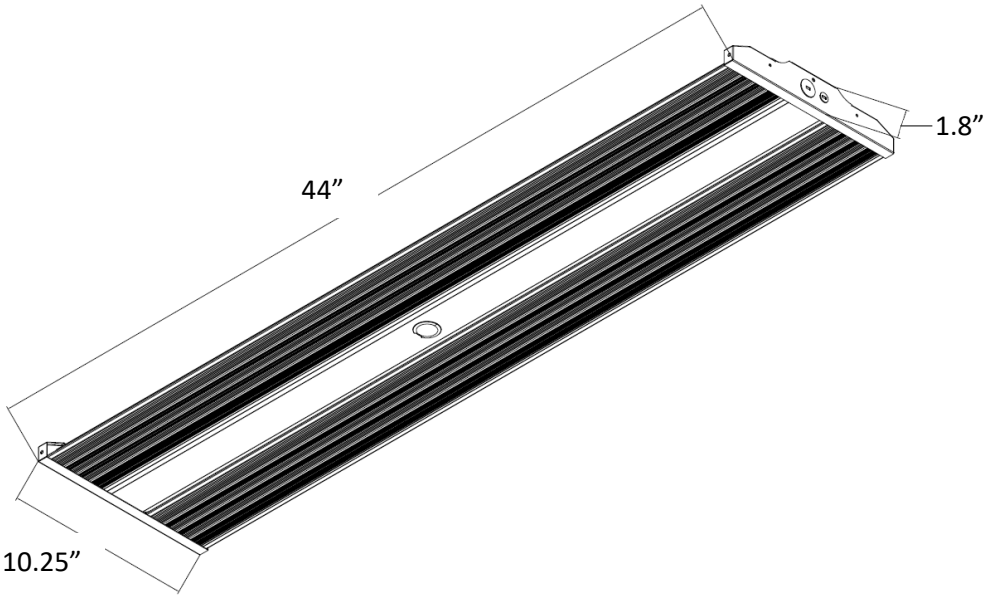

LumexLED • 1489 W 13th Street • Riviera Beach FL 33404 • (561) 863-3499 • Sales@LumexLED.com

Specifications and dimensions subject to change without notice