LXLEDTFX-2 Wet Location Remote Capable LED Emergency Unit

Project:	
Type:	
Catalog #:	

STANDARD | *OPTIONAL*

ILLUMINATION

- *Sealed and gasketed weatherproof lamp heads with high performance chrome-plated metallized reflector and tempered glass lenses for optimal light distribution.*
- *Long lasting efficient ultra bright white LED lamp heads.*
- *1.875W (15 LEDs x 0.125) per head.*

ELECTRICAL

- *Dual 120/277 voltage.*
- *Charge rate/power "ON" LED indicator light and push-to-test switch for mandated code compliance testing.*
- *9.6V long life, maintenance-free, rechargeable NiCd battery.*
- *Internal solid-state transfer switch automatically connects the internal battery to LED lamp heads for minimum 90-minute emergency illumination.*
- *Fully automatic solid-state, two rate charger initiates battery charging to recharge a discharged battery in 24 hours.*
- *Remote capacity of 3.7W standard in operating temperatures of 0°C – 50°C.*

MOUNTING

- *External mounting brackets for simplified wall mounting.*
- *Knockout for conduit applications.*

HOUSING

- *Corrosion-resistant 5VA flame retardant UV-stabilized polycarbonate in gray or black finish.*
- *Sealed and gasketed housing with hinged cover.*
- *Sealed test switch.*

OPTIONS

- *CEC: Certified to CEC under Title 20 Regulations.*

WARRANTY / LISTING

- *Five year warranty on all electronics and housing. Battery prorated for five years.*
- *Meets UL924, NFPA 101 Life Safety Code, NEC, OSHA, Local and State Codes.*
- *UL Listed for wet locations (-20ºC – 50ºC).*

DIMENSIONS

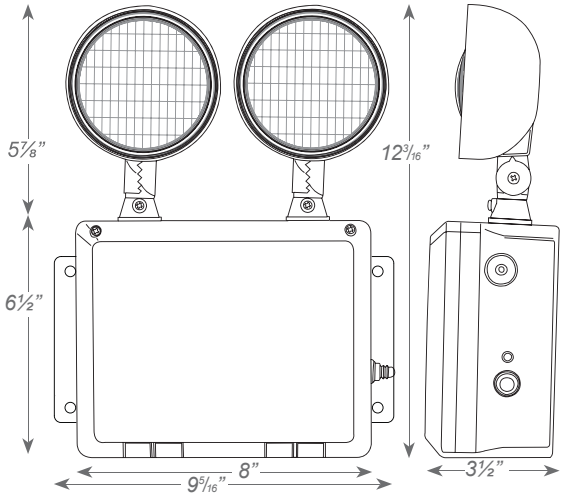

ORDERING INFORMATION

Sample Part Number: **LXLEDTFX-2**

MODEL	HOUSING COLOR		OPTIONS	
LXLEDTFX-2	*(blank)*	*Gray*	*CEC*	*Title 20 compliant*
	B	*Black*		

Special voltage options available. Check with your LumexLED Representative.

LumexLED • 1489 W 13th Street • Riviera Beach FL 33404 • (561) 863-3499 • Sales@LumexLED.com

Specifications and dimensions subject to change without notice

LXLEDTFX-2 Wet Location Remote Capable LED Emergency Unit

Lumex LED

Project:	
Type:	
Catalog #:	

ELECTRICAL INFORMATION

CATALOG NUMBER	INPUT WATTS (W)		INPUT AMPS (A)	
	120V	277V	120V	277V
LXLEDTFX-2	2.7	2.7	0.030	0.013

CENTER-TO-CENTER SPACING GUIDELINES

For reference only.

UNIT LOCATION
LIGHT SOURCE

	12	11	10	9	8	7	6	5	4	3	2	1	0	1	2	3	4	5	6	7	8	9	10	11	12
1	0.04	0.05	0.07	0.11	0.15	0.25	0.54	0.93	0.48	0.50	0.44	0.41	0.55	0.67	0.96	0.79	0.35	0.11	0.09	0.06	0.04	0.04	0.02	0.02
2	0.04	0.05	0.06	0.10	0.20	0.53	2.11	3.64	1.87	0.80	0.62	0.64	0.88	1.47	2.93	3.31	1.31	0.44	0.10	0.07	0.05	0.03	0.02	0.02
3	0.04	0.05	0.08	0.12	0.20	0.76	2.8.	3.33	2.56	1.77	0.98	1.02	1.12	2.74	3.00	3.12	0.95	0.33	0.10	0.07	0.06	0.04	0.02	0.02
4	0.04	0.07	0.09	0.13	0.19	0.51	1.40	2.19	3.15	2.85	1.33	0.95	1.05	3.55	2.31	1.78	1.03	0.41	0.12	0.08	0.05	0.03	0.02	0.02
5	0.05	0.06	0.07	0.11	0.16	0.25	0.50	1.33	3.05	3.40	1.36	0.84	0.75	2.53	1.20	0.53	0.33	0.15	0.10	0.07	0.05	0.04	0.02	0.02
6	0.04	0.06	0.08	0.12	0.14	0.20	0.25	0.54	0.98	1.29	0.67	0.67	0.71	0.94	0.55	0.31	0.22	0.11	0.08	0.06	0.04	0.03	0.02	0.02

Meets NFPA 101 Requirements for: 16' center-to-center spacing - 3' path of egress 1' from the wall- 7 1/2' mounting height.

REMOTE LAMP COMPATIBILITY

MODEL NUMBER	BATTERY	REMOTE CAPACITY	COMPATIBLE REMOTE HEAD FAMILY											
			MRHLED	RHLED	RH16LED	RH16		RH		RHR		SRH		SRHLED
				MV		6V	12V	6V	12V	6V	12V	6V	12V	
LXLEDTFX-2	9.6V	3W		X										

LumexLED • 1489 W 13th Street • Riviera Beach FL 33404 • (561) 863-3499 • Sales@LumexLED.com

Specifications and dimensions subject to change without notice