LXMPAL-KFS

Multi-Purpose Area Luminaires
Kelvin Field Selectable

Project:	
Type:	
Catalog #:	

STANDARD

CERTIFIED | DLC LISTED PREMIUM | FC | WET | 4kV Surge Protection | IP65

FEATURES

- *Field selectable 3500k (warm/neutral white), 4000k (neutral white) and 5000k (cool white) color temperatures.**
- *Long-life LEDs provide up to 149,000 hours of operation with at least 70% of initial lumen output (L_{70}).***
- *Available models provide from 2,000 to 7,200 lumens, and from 125 to 156 lumens per watt (LPW).**
- *Standard optic provides an IES roadway type V distribution, or a 7V (vertical) x 7H (horizontal) NEMA floodlight distribution.*
- *Universal 120-277 AC voltage (50-60Hz) is standard.*
- *0-10vdc dimming drivers are standard.*
- *Power factor > 90.*
- *Total harmonic distortion < 20%.*
- *Color rendering index > 80.*
- *Die cast aluminum housing with durable, dark bronze powder coat finish.*
- *Polycarbonate lens.*
- *Wireway enclosure is sealed with a water-tight, silicon rubber gasket.*
- *Easy installation in new construction or retrofit applications.*

* *Contact factory for other color temperatures and lumen packages.*
** *L70 hours are IES TM-21-11 calculated hours.*

WARRANTY & LISTINGS

- *cULus listed for wet locations in ambient temperatures from -40°C to 50°C (-40°F to 122°F).*
- *IP65 rated for ingress protection.*
- *DLC premium approved.*
- *Lens is IK 10 rated for protection from external impacts.*
- *Salt fog tested for 1,000 hours (ASTM B117). After salt fog testing, paint rated at 7 per ASTM D1654-05 scratch test.*
- *Complies with FCC Part 15, class A.*
- *Complies with EN61000-4-5, surge immunity protection (4kV).*
- *5-year warranty of all electronics and housing.*

MOUNTING OPTIONS & ACCESSORIES

- *Standard aluminum die-cast knuckle-mount for junction box installation.*
- *Yoke-mount option provides secure attachment to flat surfaces, 4L & 7L only, sold separately.*
- *Line voltage ground stake allows for easy installation for landscape illumination, sold separately.*

ORDERING INFORMATION

Example: LXMPAL-4L-LKFS

Series	Nominal Lumen Output		Color Temperature		Mounting Accessories (Order Separately)	
LXMPAL	2L	2000 lumens	KFS*	3500k	LXMPAL-KFS-YKL	Yoke mount, 4L & 7L
	4L	4000 lumens		4000k	MPOST17	Line voltage ground stake
	7L	7000 lumens		5000k		

* *Field selectable kelvin temperatures.*

LumexLED • 1489 W 13th Street • Riviera Beach FL 33404 • (561) 863-3499 • Sales@LumexLED.com

Specifications and dimensions subject to change without notice

LXMPAL-KFS

Multi-Purpose Area Luminaires
Kelvin Field Selectable

Lumex LED

ELECTRICAL DATA

Series	Measurements	MPAL-2L			MPAL-4L			MPAL-7L		
		3500K	4000K	5000K	3500K	4000K	5000K	3500K	4000K	5000K
LXMPAL-KFS	Lumens	2002	2179	2085	4436	4696	4526	6601	7170	6884
	Watts	16	15	16	31	30	31	52	49	51
	Efficacy	125	145	132	142	156	145	126	147	134
	Input Current (A)	120V = 0.13A	120V = 0.13A	120V = 0.13A	120V = 0.26A	120V = 0.25A	120V = 0.26A	120V = 0.43A	120V = 0.41A	120V = 0.43A
		240V = 0.07A	240V = 0.06A	240V = 0.07A	240V = 0.13A	240V = 0.13A	240V = 0.13A	240V = 0.22A	240V = 0.20A	240V = 0.21A
		277V = 0.06A	277V = 0.05A	277V = 0.06A	277V = 0.11A	277V = 0.11A	277V = 0.11A	277V = 0.19A	277V = 0.18A	277V = 0.18A

DIMENSIONS

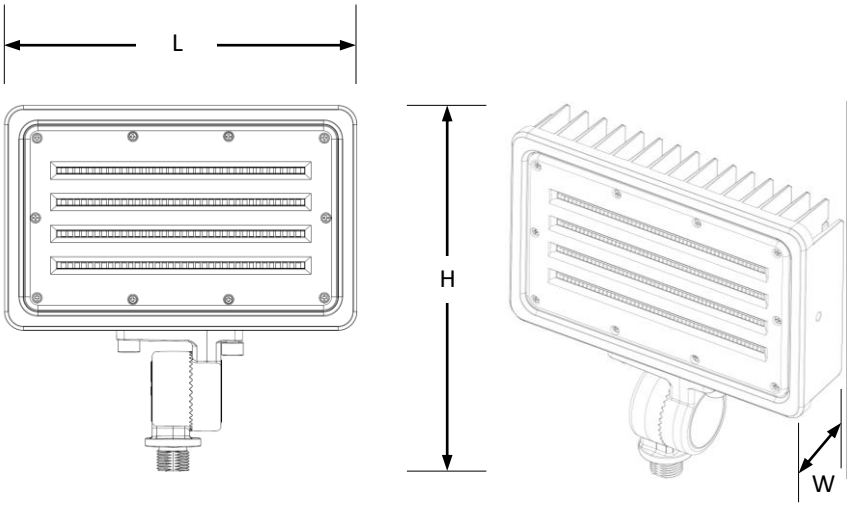

Model	Length (L)	Width (W)	Depth (H)	Weight
2L	4.3”	1.7”	5.8”	1 lbs.
4L	8.7”	1.9”	9”	4 lbs.
7L	8.7”	1.9”	9”	4 lbs.

EFFECTIVE PROJECTED AREAS (EPA’s)

2L

Front = 0.17 s.f.
Side = 0.07 s.f.
Face = 0.05 s.f.

4L & 7L

Front = 0.54 s.f. (knuckle) / 0.44 s.f. (yoke)
Side = 0.12 s.f. (knuckle) / 0.09 s.f. (yoke)
Face = 0.11 s.f. (knuckle) / 0.12 s.f. (yoke)

LumexLED • 1489 W 13th Street • Riviera Beach FL 33404 • (561) 863-3499 • Sales@LumexLED.com

Specifications and dimensions subject to change without notice

PHOTOMETRIC DATA

LXMPAL-2L-KFS

Luminaire Data

Description	Multi Purpose Area Light 2L - KFS
Total Lumens	2,002
Input Wattage	16
Efficacy (lm/W)	126
Max. Cd.	1131.47 (337.5H, 6V)
IES Classification	Type I
Longitudinal Classification	Very Short

Luminaire Classification Systems (LCS)

LCS Zone		Lumens	%Lum
FL	0-30	438	21.9%
FM	30-60	488	24.4%
FH	60-80	74	3.7%
FVH	80-90	3	0.2%
BL	0-30	434	21.7%
BM	30-60	491	24.5%
BH	60-80	71	3.6%
BVH	80-90	3	0.1%
UL	90-100	0	0.0%
UH	100-180	0	0.0%
Total		2,002	100.0%
BUG Rating		B1-U0-G0	

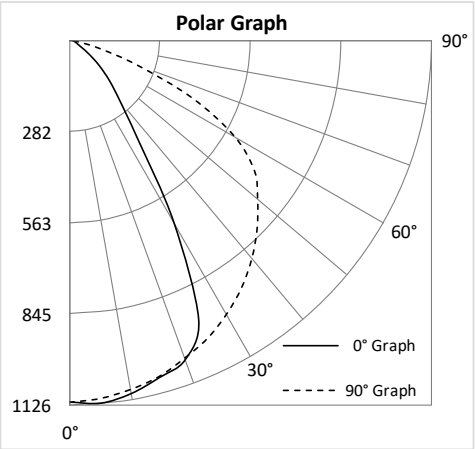

LXMPAL-4L-KFS

Luminaire Data

Description	Multi Purpose Area Light 4L - KFS
Total Lumens	4,436
Input Wattage	31
Efficacy (lm/W)	142
Max. Cd.	1625.57 (112.5H, 5V)
IES Classification	Type VS
Longitudinal Classification	Very Short

Luminaire Classification Systems (LCS)

LCS Zone		Lumens	%Lum
FL	0-30	625	14.1%
FM	30-60	1,190	26.8%
FH	60-80	372	8.4%
FVH	80-90	16	0.4%
BL	0-30	629	14.2%
BM	30-60	1,205	27.2%
BH	60-80	383	8.6%
BVH	80-90	16	0.4%
UL	90-100	0	0.0%
UH	100-180	0	0.0%
Total		4,436	99.9%
BUG Rating		B2-U0-G1	

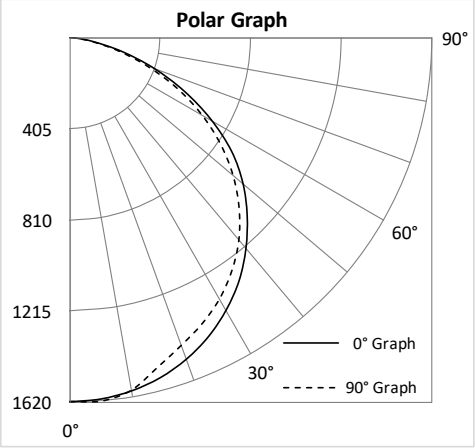

LXMPAL-7L-KFS

Luminaire Data

Description	Multi Purpose Area Light 7L - KFS
Total Lumens	6,601
Input Wattage	52
Efficacy (lm/W)	126
Max. Cd.	2750.84 (157.5H, 1V)
IES Classification	Type VS
Longitudinal Classification	Very Short

Luminaire Classification Systems (LCS)
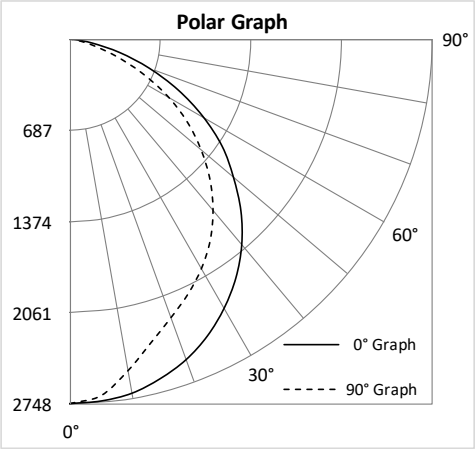
LCS Zone		Lumens	%Lum
FL	0-30	989	15.0%
FM	30-60	1,783	27.0%
FH	60-80	519	7.9%
FVH	80-90	21	0.3%
BL	0-30	987	15.0%
BM	30-60	1,774	26.9%
BH	60-80	510	7.7%
BVH	80-90	19	0.3%
UL	90-100	0	0.0%
UH	100-180	0	0.0%
Total		6,601	100.0%
BUG Rating		B2-U0-G1