LXPNL2X4-LKFS 2X4 Back-Lit LED Panel - LKFS

Project:	
Type:	
Catalog #:	

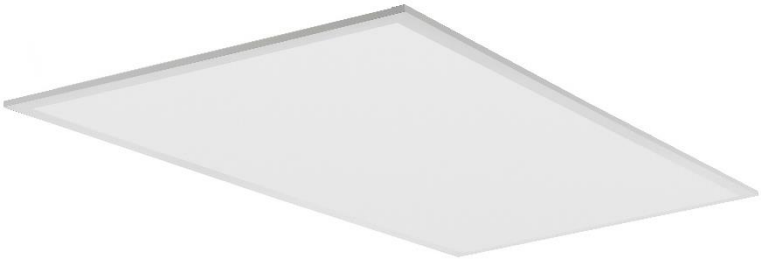

STANDARD

FEATURES

- *Field selectable 3500k (warm/neutral white), 4000k (neutral white), & 5000k (cool white) color temperatures.**
- *Long-life LEDs provide 144,000 hours of operation with at least 70% of initial lumen output (L_{70}), and 44,000 hours with at least 90% of initial lumen output (L_{90}).***
- *Selectable lumen outputs range from 3,300 to 5,000 nominal lumens.**
- *Uniform illumination with no visible LED pixilation.*
- *Universal 120-277 AC voltage (50-60Hz) is standard.*
- *0-10vdc dimming drivers are standard.*
- *Power factor > 90.*
- *Total harmonic distortion < 20%.*
- *Color rendering index > 80.*
- *Steel frame and housing backplate.*
- *PMMA (polymethyl methacrylate) LED lenses for optimal light distribution, efficiency and longevity.*
- *Easy installation in new construction or retrofit.*
- *Standard earthquake clips provide secure installation in grid ceilings.*
- *Optional emergency drivers are available.*
- *Standard mounting options include recessed mounting in grid ceilings, or suspended mounting using attached hanging brackets. For mounting in plaster or other hard ceiling, see Mounting Kits.*

** Contact factory for other color temperatures and lumen packages.*
***L_{70} hours are IES TM-21-11 calculated hours.*

WARRANTY & LISTINGS

- *cULus for damp locations and insulated ceilings (Type IC-rated). Suitable for ambient temperatures from -20°C to 40°C (-4°F to 104°F).*
- *DLC premium approved.*
- *Flicker-free per IEEE1789-2015 (no observable adverse effects of flicker at 100% light output level).*
- *Complies with FCC Part 15, class B.*
- *Surge immunity protection = 1kV.*
- *5-year warranty of all electronics and housing.*

MOUNTING KITS

- *Optional Surface Mount Kits (LXSMKT-24) and Flange Mounting Kits (LXFLANGEKIT24-ET) provide for installation on plaster or other hard ceilings.*
- *Optional Cable Mounting Kits (LXPNL-CMK) provide additional security, as well as suspended mounting.*

DIMENSIONS

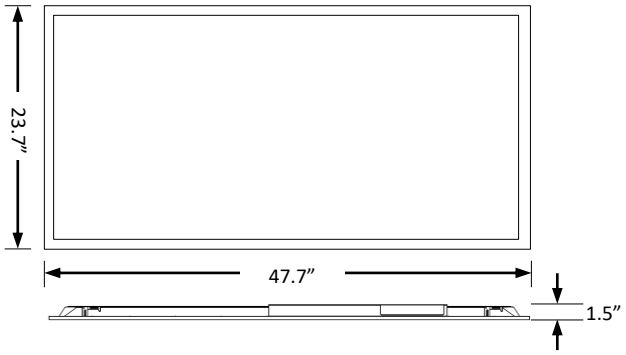

Weight: 9 lbs.

ORDERING INFORMATION

Example: LXPNL2X4-50L-LKFS-PRM

Series	Maximum Lumens	Lumen Output/ Color Temperature			DLC		Emergency Driver [1]		Accessories	
LXPNL2X4	50L	LKFS*	Selectable Lumens	Selectable CCT	PRM	PREMIUM	EM5	650 lumens	DWS-010-T	0-10v dimmer, toggle switch
			3,300 lm	3500K			EM10	1,300 lumens		
			4,500 lm	4000K			EM13	1,690 lumens	DWS-010-D	0-10v dimmer, decora switch
		*Field selectable	5,000 lm	5000K			Blank	No emergency driver	IP710-DLZ	0-10v dimmer, button switch

[1] See list of emergency drivers (page 3).

LumexLED • 1489 W 13th Street • Riviera Beach FL 33404 • (561) 863-3499 • Sales@LumexLED.com

Specifications and dimensions subject to change without notice

LXPNL2X4-LKFS 2X4 Back-Lit LED Panel - LKFS

ELECTRICAL DATA

Series	Measurements	Low Lumens			Mid Lumens			High Lumens		
		3500K	4000K	5000K	3500K	4000K	5000K	3500K	4000K	5000K
LXPNL2X4-LKFS	Lumens	3284	3323	3389	4448	4576	4538	5015	5247	5157
	Watts	24	23	24	33	32	33	38	37	38
	Efficacy	138	148	144	134	144	138	131	141	137
	Input Current (A)	120V = 0.20A	120V = 0.19A	120V = 0.20A	120V = 0.28A	120V = 0.27A	120V = 0.28A	120V = 0.32A	120V = 0.31A	120V = 0.32A
		240V = 0.10A	240V = 0.10A	240V = 0.10A	240V = 0.14A	240V = 0.13A	240V = 0.14A	240V = 0.16A	240V = 0.15A	240V = 0.16A
		277V = 0.09A	277V = 0.08A	277V = 0.09A	277V = 0.12A	277V = 0.12A	277V = 0.12A	277V = 0.14A	277V = 0.13A	277V = 0.14A

PHOTOMETRIC DATA

LXPNL2X4-50L-LKFS-PRM

Luminaire Data

Description	Premium Back Lit Panel 2X4 50L 5K - LKFS
Total Lumens	5,157
Input Wattage	38
Efficacy (lm/W)	137
Spacing Criterion (0-180°)	1.34
Spacing Criterion (90-270°)	1.28

Zonal Lumen Summary

Zone	Lumens	%Fixt
0-20°	614	11.9%
0-30°	1,316	25.5%
0-40°	2,181	42.3%
20-50°	2,491	48.3%
40-70°	2,457	47.6%
0-60°	3,964	76.9%
0-80°	5,039	97.7%
0-90°	5,152	99.9%
90-180°	5	0.1%
0-180°	5,157	100.0%

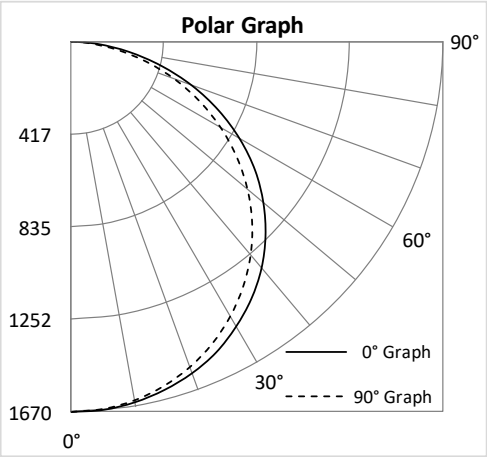

LXPNL2X4-LKFS 2X4 Back-Lit LED Panel - LKFS

COMPATIBLE EMERGENCY DRIVERS*

Emergency Driver Part Number	EM5		EM10		EM13		Runtime
Model	Watts	EM Lumens	Watts	EM Lumens	Watts	EM Lumens	
LXPNL2X4-50L-LKFS-PRM	5	650	10	1300	13	1690	90 MINS.

* Suitable for ambient temperatures above 0°C (32°F).

COMPATIBLE DIMMERS & CONTROLS

Manufacturer	Model Number	Dimming Range	Load Switching Capacity
LumexLED	LXDWS-010V-T	10%-100%	600W
LumexLED	LXDWS-010V-D	10%-100%	600W
Leviton	IP710-LFZ	10%-100%	1200W
Lutron	DVSTV	10%-100%	450W

LXPNL2X4 2x4 Premium Back-Lit LED Panel

MOUNTING MEANS – ORDER SEPARATELY

- *Optional surface mounting kits (LXSMKT-24) mounts below the ceiling.*
- *Optional flange mounting kits provide for recessed installation on plaster or other hard ceilings. Attach Flange Mount Kit (LXFLANGEKIT24-ET) to ceiling joists or other stationary structures, and the panel is mounted flush to the ceiling.*
- *Optional cable mounting kits provide additional security, as well as suspended mounting. Attach one end of the Cable Mount Kit (LXPNL-CMK) to luminaire earthquake clips using spring clips, and attach the other end to stationary structures using the adjustable, locking ceiling attachment (see picture below right).*

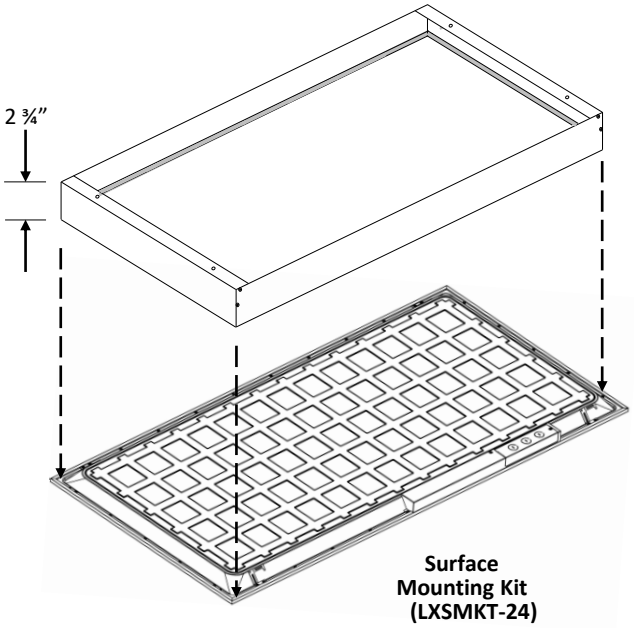

Surface Mounting Kit (LXSMKT-24)

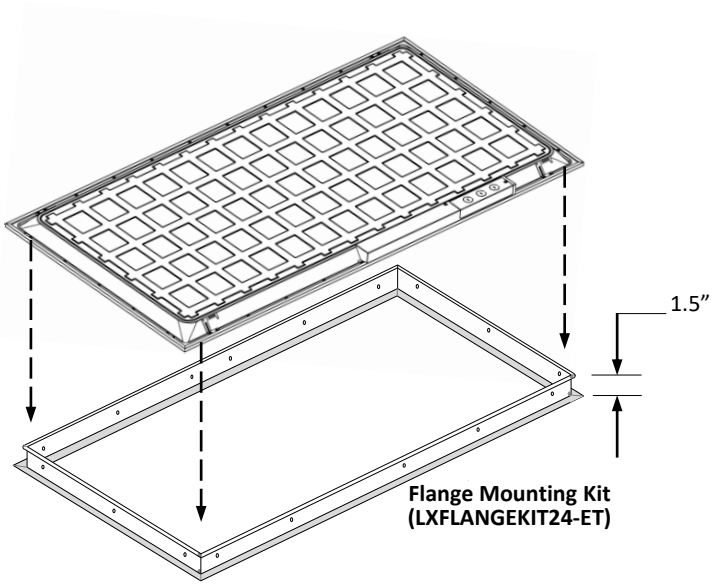

Flange Mounting Kit (LXFLANGEKIT24-ET)

Cable Mounting Kit (PNL-CMK)

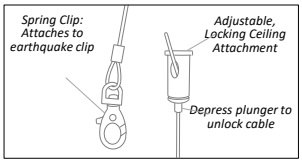

Cable Mount Kit:
- *Spring Clip*
- *Adjustable, locking ceiling attachment*

LumexLED • 1489 W 13th Street • Riviera Beach FL 33404 • (561) 863-3499 • Sales@LumexLED.com

Specifications and dimensions subject to change without notice